SPRINFORS Шарниры угловые с зажимом (оцинкованная сталь)

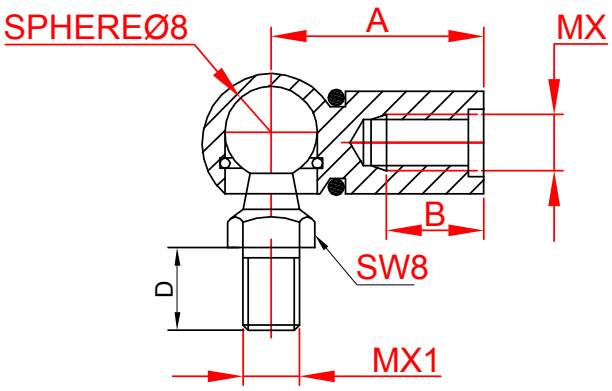

Ref. No	Размеры (mm)				
	A	B	MX	D	MX1
K001	17	10	M5x0.8	10	M5x0.8
K002	17	10	M5x0.8	11	M6x1
K003	17	10	M6x1	10	M5x0.8
K004	17	10	M6x1	11	M6x1
1130	18	10	M5x0.8	10	M5x0.8
K005	18	10	M5x0.8	11	M6x1
K006	18	10	M6x1	10	M6x1
K007	18	10	M6x1	11	M5x0.8
K008	19	10	M5x0.8	10	M5x0.8
K009	19	10	M5x0.8	11	M6x1
K010	19	10	M6x1	10	M5x0.8
K011	19	10	M6x1	11	M6x1
K012	20	10	M5x0.8	10	M5x0.8
K013	20	10	M5x0.8	11	M6x1

Ref. No	Размеры (mm)				
	A	B	MX	D	MX1
K014	20	10	M6x1	10	M5x0.8
K015	20	10	M6x1	11	M6x1
K016	21	10	M5x0.8	10	M5x0.8
K017	21	10	M5x0.8	11	M6x1
K018	21	10	M6x1	10	M5x0.8
K019	21	10	M6x1	11	M6x1
1135	22	10	M5x0.8	10	M5x0.8
K020	22	10	M5x0.8	11	M6x1
1127	22	10	M6x1	10	M5x0.8
K021	22	10	M6x1	11	M6x1
1136	22	10	M5x0.8	10	M6x1
1137	22	10	M6x1	10	M6x1
1139	18	10	M5x0.8	10	M6x1
K022	18	10	M4x0.7	10	M4x0.7

(Standard application)

SPRINFORS Шарниры угловые с зажимом (оцинкованная сталь)

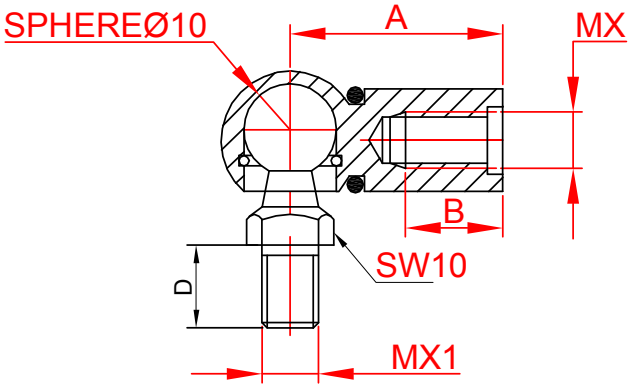

Ref. No	Размеры (mm)				
	A	B	MX	D	MX1
K101	17	9	M6x1	11	M6x1
K102	17	9	M6x1	13	M8x1.25
K103	17	9	M8x1.25	11	M6x1
K104	17	9	M8x1.25	13	M8x1.25
K105	18	10	M6x1	11	M6x1
K106	18	10	M6x1	13	M8x1.25
1133	18.5	10	M8x1.25	11	M6x1
1121	18.5	10	M8x1.25	13	M8x1.25
1122	19	10	M6x1	11	M6x1
1134	19	10	M6x1	13	M8x1.25
K107	19	10	M8x1.25	11	M6x1
K108	19	10	M8x1.25	13	M8x1.25
K109	20	10	M6x1	11	M6x1
K110	20	10	M6x1	13	M8x1.25
K111	20	10	M8x1.25	11	M6x1
K112	20	10	M8x1.25	13	M8x1.25

Ref. No	Размеры (mm)				
	A	B	MX	D	MX1
K113	21	11	M6x1	11	M6x1
K114	21	11	M6x1	13	M8x1.25
K115	21	11	M8x1.25	11	M6x1
K116	21	11	M8x1.25	13	M8x1.25
1153	22	11	M6x1	11	M6x1
K117	22	11	M6x1	13	M8x1.25
K118	22	11	M8x1.25	11	M6x1
K119	22	11	M8x1.25	13	M8x1.25
K120	23	11	M6x1	11	M6x1
K121	23	11	M6x1	13	M8x1.25
K122	23	11	M8x1.25	11	M6x1
K123	23	11	M8x1.25	13	M8x1.25
K124	24	12	M6x1	11	M6x1
K125	24	12	M6x1	13	M8x1.25
K126	24	12	M8x1.25	11	M6x1
K127	24	12	M8x1.25	13	M8x1.25

SURFACE PROTECTION: Zinc plated and white, black or yellow passivated(Standard application)

SPRINFORS Шарниры угловые с зажимом (оцинкованная сталь)

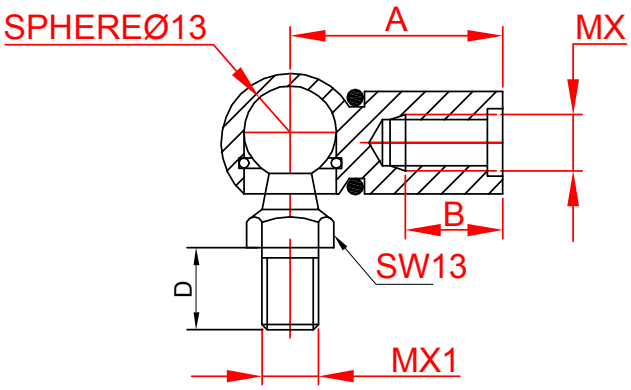

Ref. No	Размеры (mm)				
	A	B	MX	D	MX1
K201	20	11	M8x1.25	10	M8x1.25
K204	20	11	M8x1.25	16.5	M8x1.25
K205	21	11	M8x1.25	10	M8x1.25
K208	21	11	M8x1.25	16.5	M8x1.25
K209	22	11	M8x1.25	10	M8x1.25
K212	22	11	M8x1.25	16.5	M8x1.25
K213	23	12	M8x1.25	10	M8x1.25
K216	23	12	M8x1.25	16.5	M8x1.25
K217	24	12	M8x1.25	10	M8x1.25
K220	24	12	M8x1.25	16.5	M8x1.25
K221	25	12	M8x1.25	10	M8x1.25
K224	25	12	M8x1.25	16.5	M8x1.25

Ref. No	Размеры (mm)				
	A	B	MX	D	MX1
K225	26	14	M8x1.25	10	M8x1.25
K228	26	14	M8x1.25	16.5	M8x1.25
K229	28	14	M8x1.25	10	M8x1.25
K232	28	14	M8x1.25	16.5	M8x1.25
K233	30	14	M8x1.25	10	M8x1.25
1145	30	14	M8x1.25	16.5	M8x1.25
1152	22	11	M8x1.25	13	M8x1.25
K236	30	14	M8x1.25	13	M8x1.25
K237	30	14	M8x1.25	20	M8x1.25
K238	20	11	M8x1.25	13	M8x1.25
K239	25	12	M8x1.25	13	M8x1.25
K240	25	12	M8x1.25	20	M8x1.25

SURFACE PROTECTION: Zinc plated and white, black or yellow passivated(Standard application)

SPRINFORS Шарниры угловые с зажимом (оцинкованная сталь)

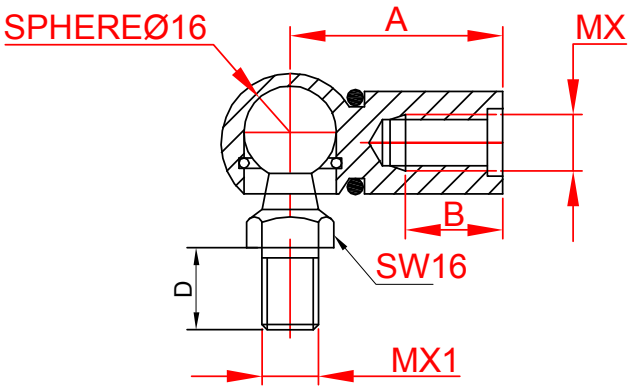

Ref. No	Размеры (mm)				
	A	B	MX	D	MX1
K501	20	9	M10x1.5	10	M10x1.5
K502	20	9	M10x1.5	15	M10x1.5
K503	20	9	M10x1.5	20	M10x1.5
K504	22	11	M10x1.5	10	M10x1.5
K505	22	11	M10x1.5	15	M10x1.5
K506	22	11	M10x1.5	20	M10x1.5
K507	24	12	M10x1.5	10	M10x1.5
K508	24	12	M10x1.5	15	M10x1.5
K509	24	12	M10x1.5	20	M10x1.5
K510	26	14	M10x1.5	10	M10x1.5
K511	26	14	M10x1.5	15	M10x1.5
K512	26	14	M10x1.5	20	M10x1.5

Ref. No	(mm)				
	A	B	MX	D	MX1
K513	28	14	M10x1.5	10	M10x1.5
K514	28	14	M10x1.5	15	M10x1.5
K515	28	14	M10x1.5	20	M10x1.5
K516	30	14	M10x1.5	10	M10x1.5
K517	30	14	M10x1.5	15	M10x1.5
K518	30	14	M10x1.5	20	M10x1.5
K519	32	16	M10x1.5	10	M10x1.5
K520	32	16	M10x1.5	15	M10x1.5
K521	32	16	M10x1.5	20	M10x1.5
K522	35	16	M10x1.5	10	M10x1.5
K523	35	16	M10x1.5	15	M10x1.5
K524	35	16	M10x1.5	20	M10x1.5

SURFACE PROTECTION: Zinc plated and white, black or yellow passivated(Standard application)

SPRINFORS Корпус шарнира углового (пластик)

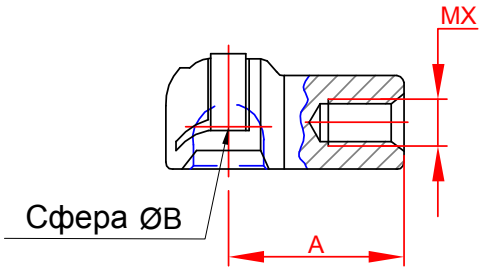

Ref. No	Размеры (mm)		
	A	ØB	MX
7525	18	10	M6x1

SPRINFORS Шарнир угловой (пластик)

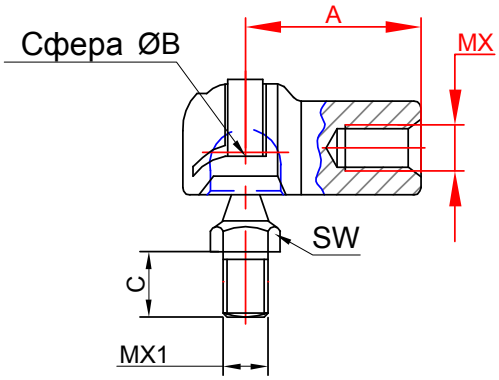

Ref. No	Размеры (mm)					
	A	ØB	C	MX	SW	MX1
7550	18	10	11	M6x1	10	M6x1
7551	18	10	13	M6x1	13	M8x1.25
7552	18	10	16.5	M6x1	13	M8x1.25

BALL STUD: Zinc plated and white, black or yellow passivated(Standard application)

SPRINFORS Корпус шарнира углового (оцинкованная сталь)

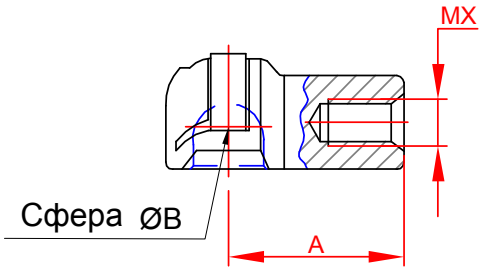

Ref. No	Размеры (mm)		
	A	ØB	MX
MP01	19	10	M6x1

SPRINFORS Шарнир угловой (оцинкованная сталь)

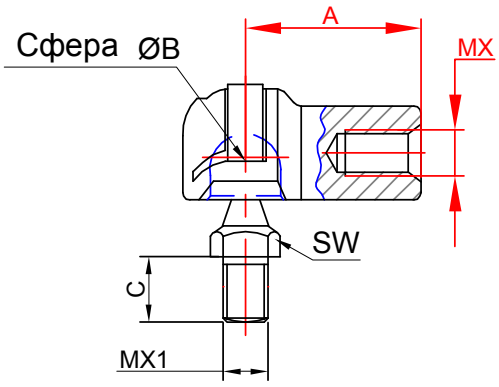

Ref. No	Размеры (mm)					
	A	ØB	C	MX	SW	MX1
MP50	19	10	11	M6x1	10	M6x1
MP51	19	10	13	M6x1	13	M8x1.25
MP52	19	10	13	M6x1	10	M6x1

BALL STUD: Zinc plated and white, black or yellow passivated(Standard application)

SPRINFORS Шарнир сферический (сталь)

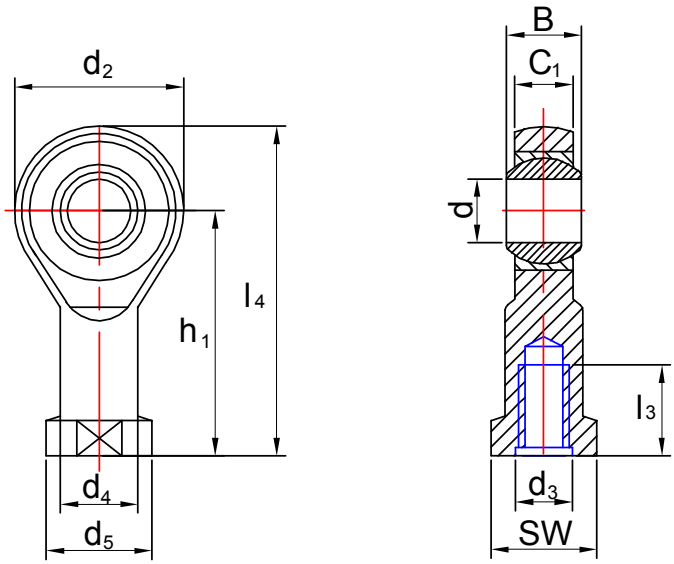

Ref. No	Размеры (mm)										
	d	d_3	SW	B	C_1 max	h_1	d_2 max	l_4 max	d_4 max	d_5 max	l_3 min
SI105	5	M5	9	8	6	27	18	36	8.5	12	8
SI106	6	M6	11	9	6.75	30	20	40	10	13	9
SI108	8	M8	14	12	9	36	24	48	12.5	16	12
SI110	10	M10	17	14	10.5	43	28	57	15	19	15
SI112	12	M12	19	16	12	50	32	66	17.5	22	18
SI114	14	M14	22	19	13.5	57	36	75	20	26	21
SI116	16	M16	24	21	15	64	40	84	22	28	24
SI118	18	M18x1.5	27	23	16.5	71	44	93	25	31	27
SI120	20	M20x1.5	30	25	18	77	48	101	27.5	35	30
SI122	22	M22x1.5	32	28	20	84	54	111	30	38	32
SI125	25	M24x2	36	31	22	94	60	124	33.5	42	36
SI128	28	M27x2	41	35	24	103	66	136	37	46	41
SI130	30	M30x2	46	37	25	110	70	145	40	50	45

SPRINFORS

Вилка
(оцинкованная сталь)

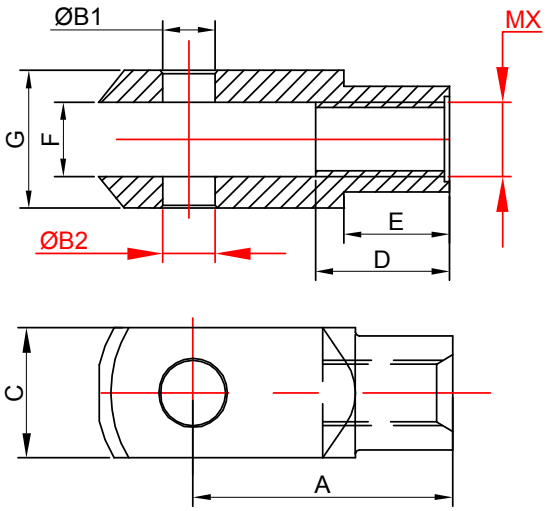

Ref. No	Размеры (mm)								
	A	ØB1 +0.1	ØB2 +0.1	C	D	E	F	G	MX
2202	32	8.1	8.1	16	16	12	8	16	M8x1.25
2203	40	11.9	11.9	20	20	15	10.5	20	M10x1.5
2204	20	5.1	5.1	10	10.5	7	5	10	M6x1
2207	20	5.1	5.1	10	10	7.5	5	10	M5x0.8
2208	32	9.1	9.1	16	16	12	8	16	M8x1.25
2209	37	8.1	8.1	20	18	12	10.5	20	M10x1.5
2213	24	8.1	8.1	16	8	4	8	16	M8x1.25
2214	40	10.1	10.1	20	20	15	10	20	M10x1.5
2217	25	10.1	10.1	16	16	12	8	16	M8x1.25
2220	25	8.1	8.1	14	13	9	7	14	M6x1
2221	20	6.1	M6x1	10	10.5	7	5	10	M6x1
2222	20	6.1	6.1	10	10.5	7	5	10	M6x1
2224	43	8.1	M8x1.25	16	20	15	8	16	M8x1.25
2225	27	12	12	20	8	3	10	20	M10x1
2226	40	8.1	8.1	20	20	15	10	20	M10x1
2227	32	8.1	8.1	16	16	12	8	16	M6x1
2229	16	4.1	4.1	8	8	5.5	3.3	8	M4x0.7
2230	24	6.1	6.1	12	12	9	6.2	12	M6x1
2233	16	2.4	2.4	8	8	5.5	3.3	8	M4x0.7

SURFACE PROTECTION: Zinc plated and white, black or yellow passivated (Standard application)

SPRINFORS Фиксатор для вилки (оцинкованная сталь)

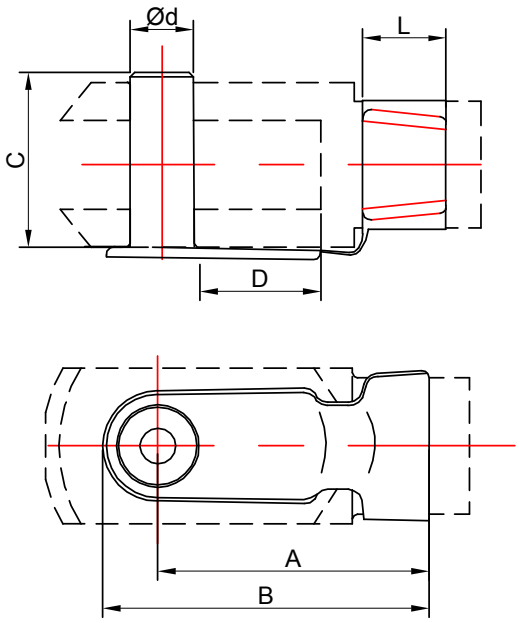

Ref. No	Размеры (mm)					
	A	B	C	D	Ød	L
C001	22.9	28.4	14.5	13	5.9	6.1
C002	29.3	37.4	19.5	16	7.9	8.1
C003	46.4	52.5	19.5	32	7.9	8.1

SURFACE PROTECTION: Zinc plated and white, black or yellow passivated(Standard application)

SPRINFORS Металлическая проушина

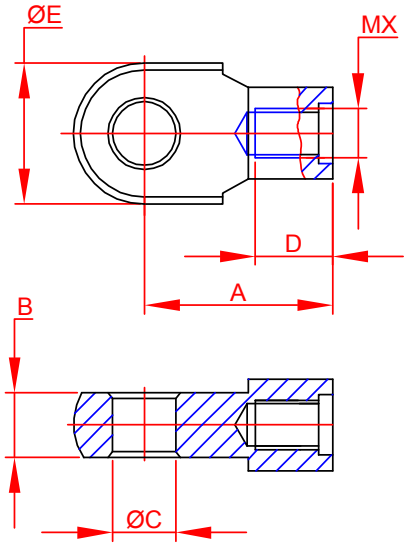

Ref. No	Размеры (mm)					
	A	B	ØC +0.1	D	ØE	MX
1300	16	3	6.1	5	11	M5X0.8
1301	16	3	5.5	7	13	M6x1
1302	20	3	6.1	7	13	M6x1
1303	22	3	6.1	8	15	M6x1
1304	22	5	8.1	9	15	M6x1
1305	30	5	8.1	14	15	M8x1.25
1309	20	3	8.1	7	13	M6x1
1310	22	3	8.1	8	13	M6x1
1311	16	3	6.4	5	11	M4x0.7
1312	22	5	6.1	9	15	M6x1
1313	16	3	8.1	7	13	M6x1
1314	22	5	5.1	9	15	M6x1
1315	22	3	8.35 BUSHING	8	13	M6x1

Ref. No	Размеры (mm)					
	A	B	ØC +0.1	D	ØE	MX
1316	22	3	10.1	8	15	M6x1
1317	30	5	6.1	14	15	M8x1.25
1318	16	3	6.1	7	13	M6x1
1319	16	3	8.1	7	13	M6x1
1320	18	3	6.1	6	13	M6x1
1321	22	5	8.1	9	15	M8x1.25
1322	30	3.7	12.85 BUSHING	10.5	20	M8x1.25
1323	25	8	8.1	10	15	M6x1
1324	30	4.3	8.1	14	15	M8x1.25
1325	30	4.5	12.80	10.5	20	M8x1.25
1326	30	4.5	8 BUSHING	10.5	20	M8x1.25
1327	22	5	8.1	9	15	M5x0.8
1329	28	5	8.1	14	15	M6x1

SURFACE PROTECTION: Zinc plated and white, black or yellow passivated(Standard application)

SPRINFORS Металлическая проушина

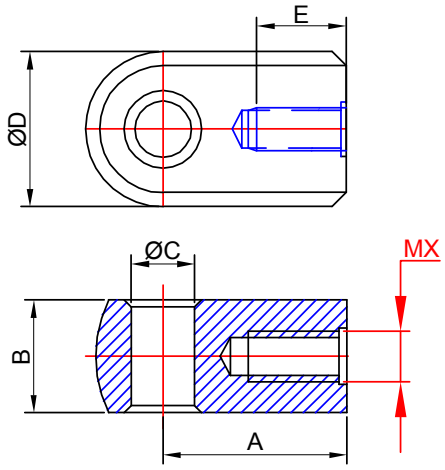

Ref. No	Размеры (mm)					
	A	B	ØC$^{+0.1}$	ØD	E	MX
4190	18	10	6.1	16	10	M6x1
4191	36	12	8.1	20	10	M10x1.25
4192	18	10	8.1	16	10	M8x1.25
4193	22	12	12.1	20	13	M10x1.25
4196	40	10	8.1	18	14	M8x1.25
DK01	18	10	10.1	18	10	M6x1
DK02	18	10	10.1	16	10	M6x1
DK03	18	10	10.1	18	10	M8x1.25
DK04	16	10	8.1	14	10	M8x1.25
DK05	16	10	8.1	14	10	M6x1
DK06	16	10	10.1	16	10	M8x1.25
DK07	16	10	6.1	14	10	M6x1
DK08	14	12	8.1	18	10	M8x1.25
DK09	20	12	8.3	18	11	M8x1.25
DK10	20	12	10.1	18	11	M8x1.25

SURFACE PROTECTION: Zinc plated and white, black or yellow passivated(Standard application)

SPRINFORS Металлическая проушина

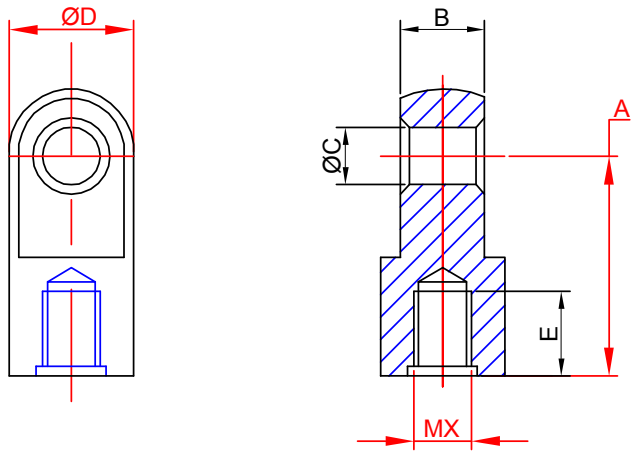

Ref. No	Размеры (mm)					
	A	B	ØC$^{+0.1}$	ØD	E	MX
7701	12	3	4.1	8	5	M3x0.5
7702	12	3	4.1	8	5	M3.5x0.6
7703	12	3	4.1	8	5	M4x0.7
7704	12	4	4.1	8	5	M3x0.5
7705	12	4	4.1	8	5	M3.5x0.6
7706	12	4	4.1	8	5	M4x0.7
7707	12	5	4.1	8	5	M3x0.5
7708	12	5	4.1	8	5	M3.5x0.6
7709	12	5	4.1	8	5	M4x0.7

SURFACE PROTECTION: Zinc plated and white, black or yellow passivated(Standard application)

SPRINFORS Металлическая проушина

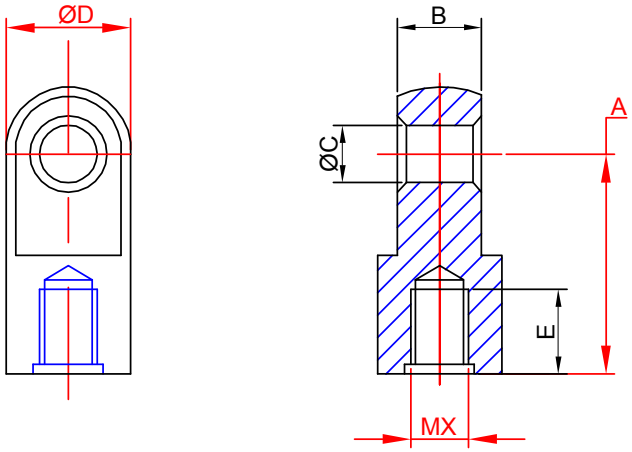

Ref. No	Размеры (mm)					
	A	B	ØC $^{+0.1}$	ØD	E	MX
7751	22	5	6.1	16	10	M6x1
7752	22	5	8.1	16	10	M6x1
7753	22	5	10.1	16	10	M6x1
7754	22	6	6.1	16	10	M6x1
7755	22	6	8.1	16	10	M6x1
7756	22	6	10.1	16	10	M6x1
7757	22	8	6.1	16	10	M6x1
7758	22	8	8.1	16	10	M6x1
7759	22	8	10.1	16	10	M6x1
7760	22	10	6.1	16	10	M6x1
7761	22	10	8.1	16	10	M6x1
7762	22	10	10.1	16	10	M6x1

Ref. No	Размеры (mm)					
	A	B	ØC $^{+0.1}$	ØD	E	MX
7763	22	5	6.1	16	10	M8x1.25
7764	22	5	8.1	16	10	M8x1.25
7765	22	5	10.1	16	10	M8x1.25
7766	22	6	6.1	16	10	M8x1.25
7767	22	6	8.1	16	10	M8x1.25
7768	22	6	10.1	16	10	M8x1.25
7769	22	8	6.1	16	10	M8x1.25
7770	22	8	8.1	16	10	M8x1.25
7771	22	8	10.1	16	10	M8x1.25
7772	22	10	6.1	16	10	M8x1.25
7773	22	10	8.1	16	10	M8x1.25
7774	22	10	10.1	16	10	M8x1.25
7775	22	8	8.6	16	10	M8x1.25

SURFACE PROTECTION: Zinc plated and white, black or yellow passivated(Standard application)

SPRINFORS Металлическая проушина

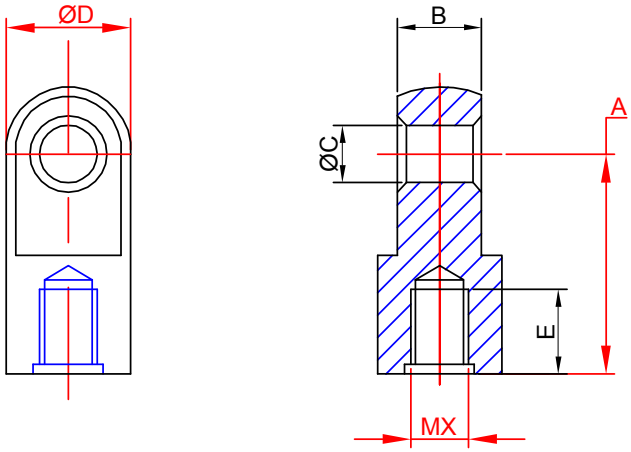

Ref. No	Размеры (mm)					
	A	B	ØC $^{+0.1}$	ØD	E	MX
1350	16	6	6.1	10	9	M5x0.8
1351	22	10	8.1	14	9	M8x1.25
1352	30	10	8.1	18	9	M10x1.5
1353	27.5	3	6.1	13	9	M6x1
1354	30.5	5	8.1	18	9	M8x1.25
1355	25	5	8.1	13	9	M6x1
1356	22	3	6.1	13	9	M5x0.8
1357	22	10	6.1	14	9	M8x1.25
1359	25	3	6.1	13	9	M5x0.8
1365	16	6	8.1	12	9	M5x0.8
1366	30	8	8.1	18	9	M8x1.25
1369	31	5	6.1	13	9	M6x1

Ref. No	Размеры (mm)					
	A	B	ØC $^{+0.1}$	ØD	E	MX
1370	31	5	8.1	13	9	M6x1
1371	32	5	6.1	13	9	M6x1
MU01	30	10	10.1	18	9	M10x1.5
MU02	36	5.5	8.1	16	9	M8x1.25
MU03	31	5.5	8.1	16	9	M8x1.25
MU05	25	8	10.1	16	9	M8x1.25
MU06	25	8	8.1	16	9	M8x1.25
MU07	25	12	10.1	19	9	M10x1.5
MU08	22	10	8.1	14	9	M6x1
MU09	35	10	10.1	20	9	M10x1.5
MU10	35	10	8.1	20	9	M10x1.5
MU11	25	8	6.1	16	9	M8x1.25

SURFACE PROTECTION: Zinc plated and white, black or yellow passivated(Standard application)

SPRINFORS Металлическая проушина

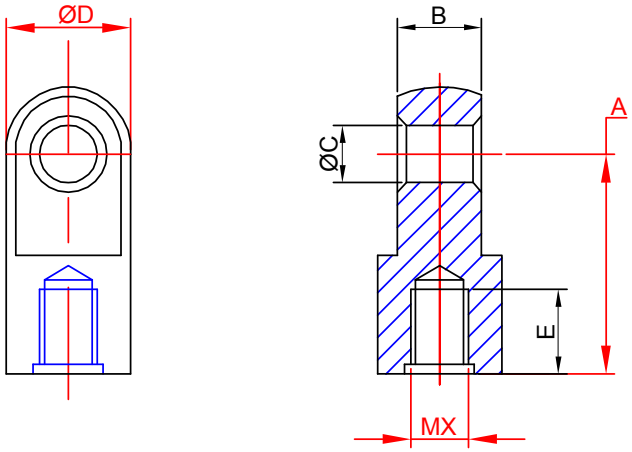

Ref. No	Размеры (mm)					
	A	B	ØC$^{+0.1}$	ØD	E	MX
MU51	40	10	10.1	25	13	M10x1.5
MU52	40	10	12.1	25	13	M10x1.5
MU53	40	10	14.1	25	13	M10x1.5
MU54	40	12	10.1	25	13	M10x1.5
MU55	40	12	12.1	25	13	M10x1.5
MU56	40	12	14.1	25	13	M10x1.5
MU57	40	14	10.1	25	13	M10x1.5
MU58	40	14	12.1	25	13	M10x1.5
MU59	40	14	14.1	25	13	M10x1.5
MU60	40	10	10.1	25	13	M12x1.75
MU61	40	10	12.1	25	13	M12x1.75
MU62	40	10	14.1	25	13	M12x1.75
MU63	40	12	10.1	25	13	M12x1.75
MU64	40	12	12.1	25	13	M12x1.75

Ref. No	Размеры (mm)					
	A	B	ØC$^{+0.1}$	ØD	E	MX
MU65	40	12	14.1	25	13	M12x1.75
MU66	40	14	10.1	25	13	M12x1.75
MU67	40	14	12.1	25	13	M12x1.75
MU68	40	14	14.1	25	13	M12x1.75
MU69	40	10	10.1	25	13	M14x2
MU70	40	10	12.1	25	13	M14x2
MU71	40	10	14.1	25	13	M14x2
MU72	40	12	10.1	25	13	M14x2
MU73	40	12	12.1	25	13	M14x2
MU74	40	12	14.1	25	13	M14x2
MU75	40	14	10.1	25	13	M14x2
MU76	40	14	12.1	25	13	M14x2
MU77	40	14	14.1	25	13	M14x2

SURFACE PROTECTION: Zinc plated and white, black or yellow passivated(Standard application)

SPRINFORS Проушины сварные (сталь)

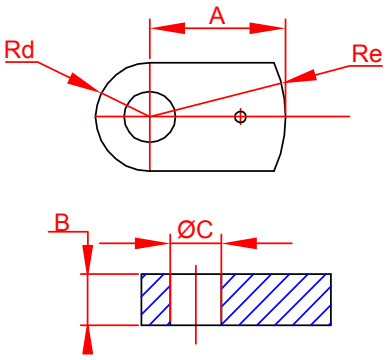

Ref. No	Размеры (mm)					
	A	B	ØC$^{+0.1}$	Rd	Re	
A01	13.5	3	6.1	6.5	13.5	
A02	13.5	3	8.1	6.5	13.5	
A03	17.5	3	6.1	7.5	17.5	
A04	17.5	3	8.1	7.5	17.5	
A05	17.5	5	6.1	7.5	17.5	
A06	17.5	5	8.1	7.5	17.5	
A16	14.5	5	8.5	7.5	17.5	
A17	17.5	5	10.1	9	18	
A18	13.5	3	6.5	6.5	13.5	
A21	17.5	5	8.1	7.5	17.5	Pin Attached
A22	17.5	5	8.1	7.5	17.5	Clip Assembled
A30	17.5	5	9.5	7.5	17.5	
A32	20.5	5	8.1	7.5	20.5	
A51	15.5	3	10.1	9.5	15.5	
A81	10.5	5	8.5	7.5	17.5	
A91	10.5	3	4.1	5	10.5	
A94	10.5	3	6.5	5	10.5	